UMBROSA®
UNIQUE SHADE DESIGN

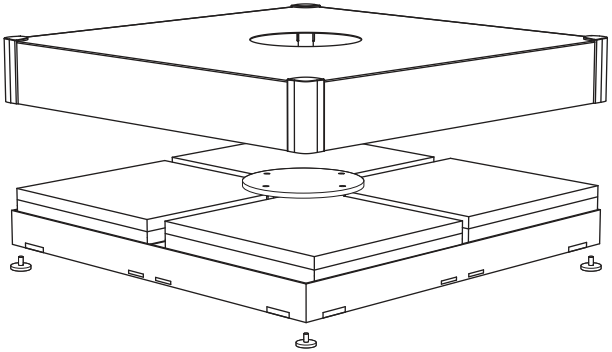

PAVER FRAME BASE 400

INSTALLATION MANUAL

PAVER FRAME BASE 400 INSTALLATION

UM: UMFIXTILMOBG0000
SSA: UM-PFB400

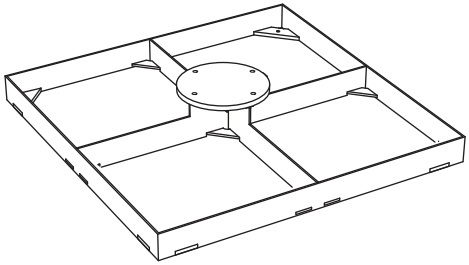

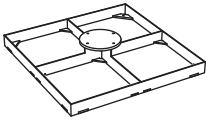

UM: MAFIXTILMOBG0000
SSA: UM-PFB400

MACOMU020B
4x

MABOLI0490
4x

OPTIONS

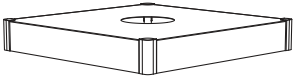

UM: UMFIXTOPMOBA0000
SSA: UM-PFB400CVR

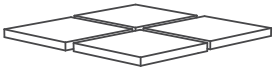

SSA: UM-PFB400SPACER-USA

SSA: UM-PFB400PAVERS-USA

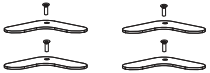

UM: UMBASM80FL00EXT
SSA: UM-CMB265-STB

UMBASEWHEELH00
SSA: UM-PFBWHEELKIT

PAVER FRAME BASE 400 INSTALLATION

1

4x

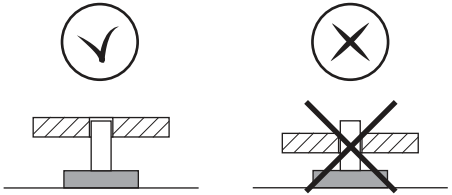

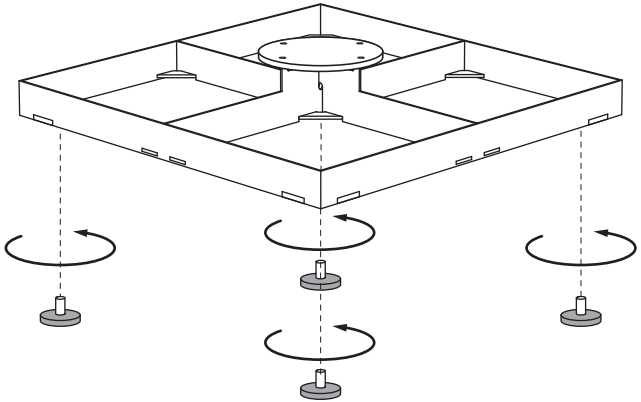

OPTIONAL WHEEL KIT:

1' UM: UMBASEWHEELH00
SSA: UM-PFBWHEELKIT

4x 4x

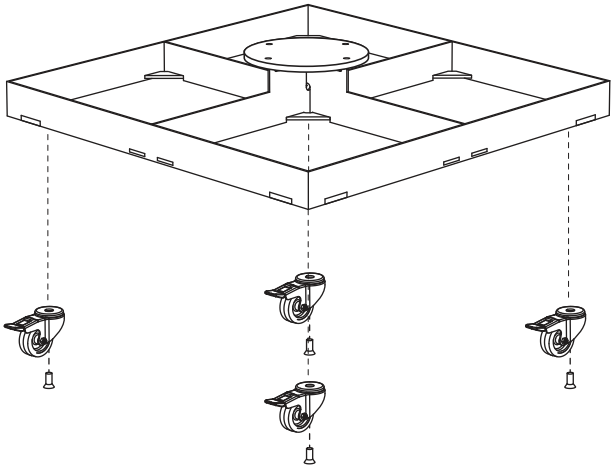

PAVER FRAME BASE 400 INSTALLATION

OPTIONAL STABILIZER KIT

1″ UM: UMBASM80FL00EXT
SSA:

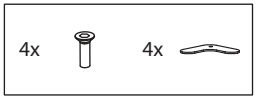

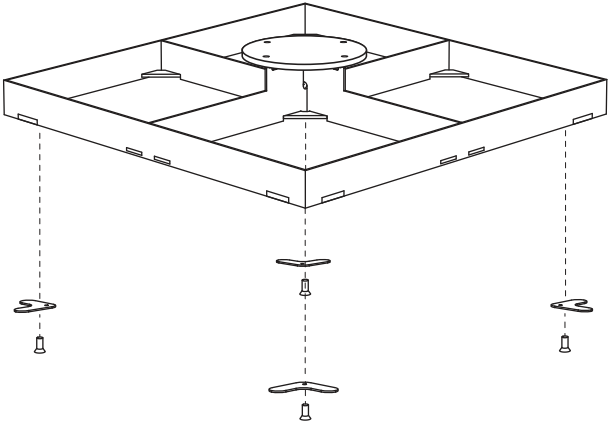

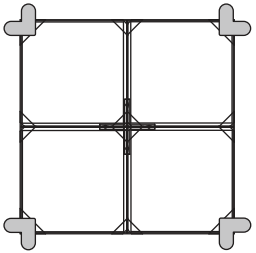

NOTE: STABILIZERS ARE ONLY NECESSARY FOR LARGER UMBRELLAS OR SPECIFIC INSTALLATION REQUIREMENTS

PAVER FRAME BASE 400 INSTALLATION

OPTIONAL KIT W/ SSA PAVERS INCLUDED:

2' SSA: UM-PFB400PAVERS-USA

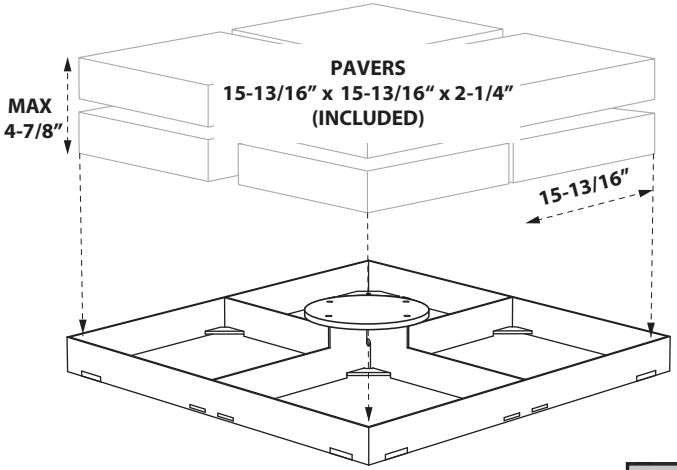

OPTIONAL KIT W/ SPACERS, W/ OUT PAVERS (LOCALLY SOURCED):

2'' SSA: UMKIT-400PFB

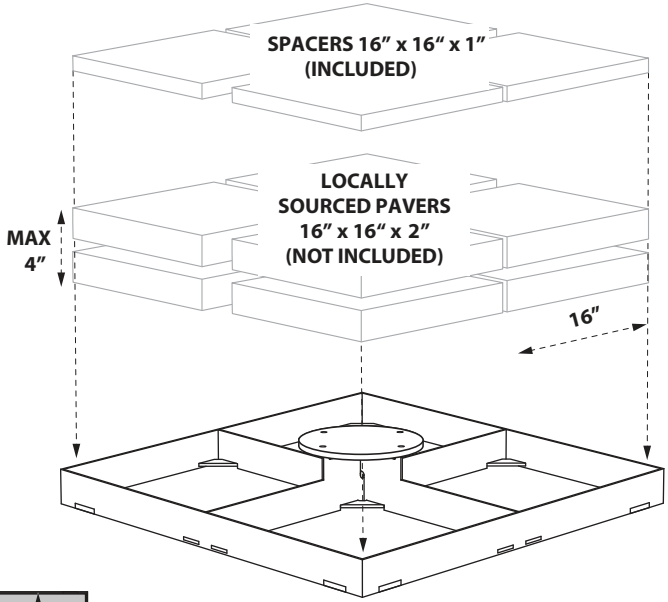

NOTE: POSITION PAVERS & SPACERS FLUSH WITH THE OUTSIDE EDGES OF THE FRAME

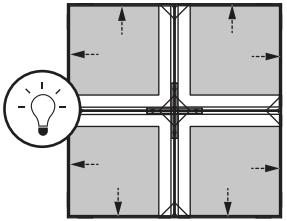

PAVER FRAME BASE 400 INSTALLATION

OPTIONAL PAVER BASE COVER :

3 UM: UMFIXTOPMOBA0000
SSA: UM-PFB400CVR

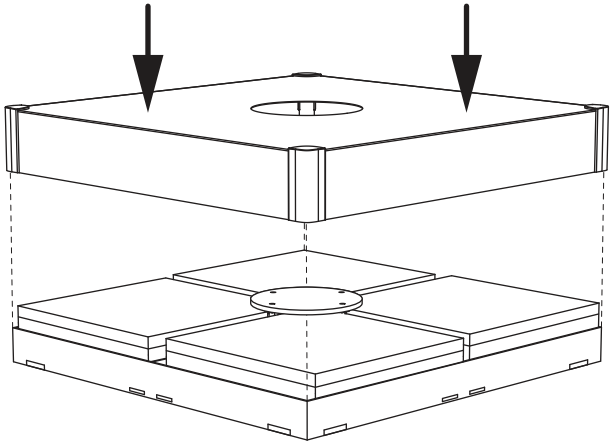

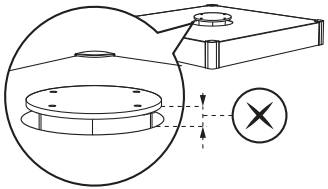

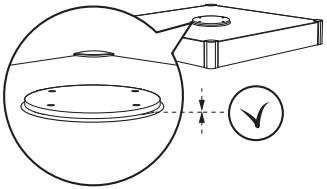

ENSURE TOP SURFACE OF COVER IS FLUSH WITH BOTTOM OF MOUNTING PLATE
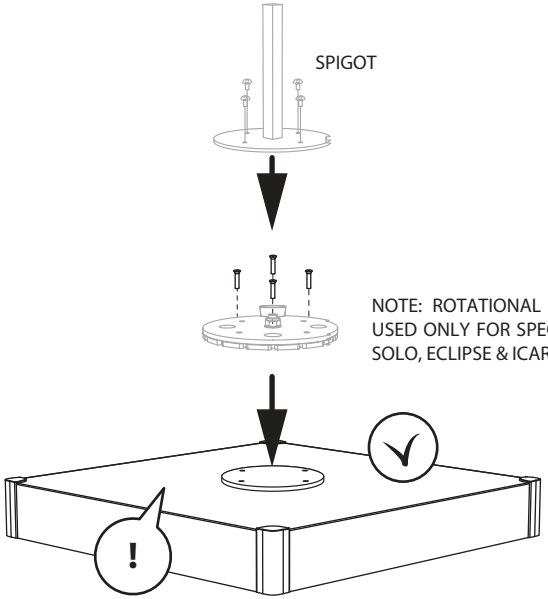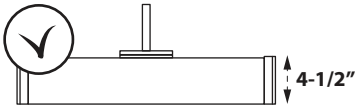
4