17105 - ALICANTE TROLLEY
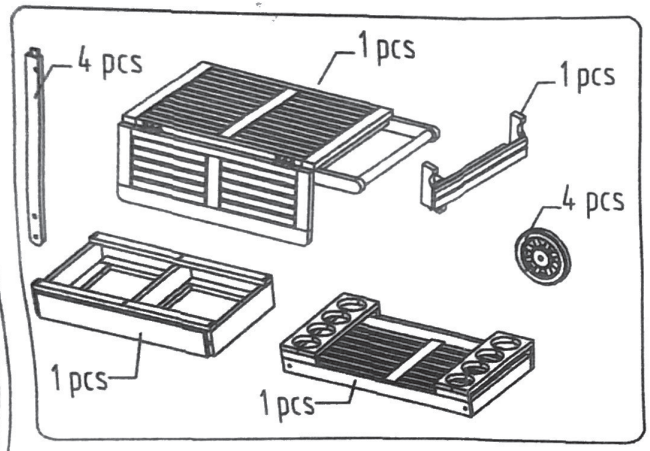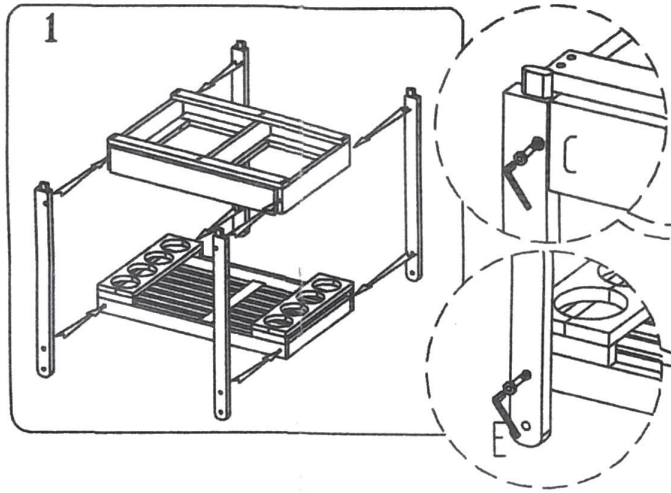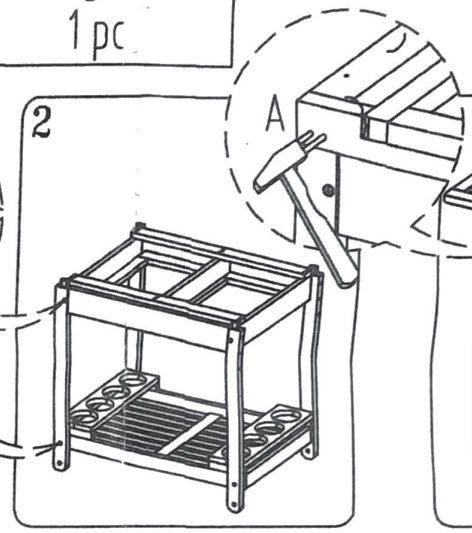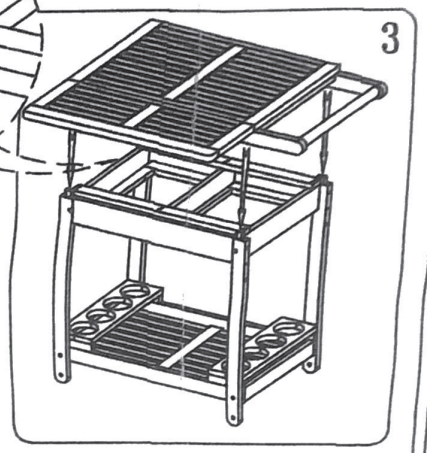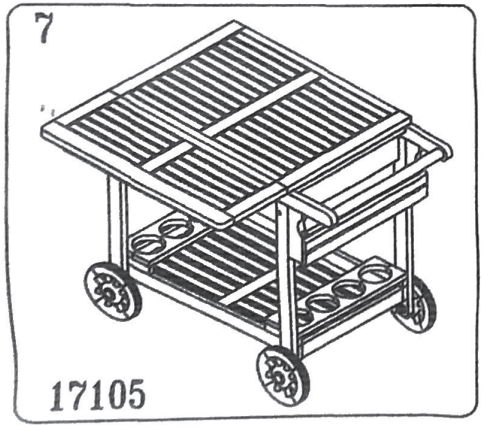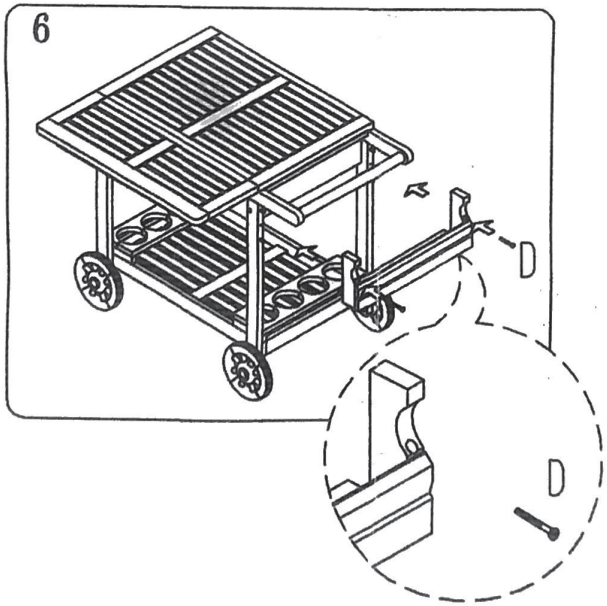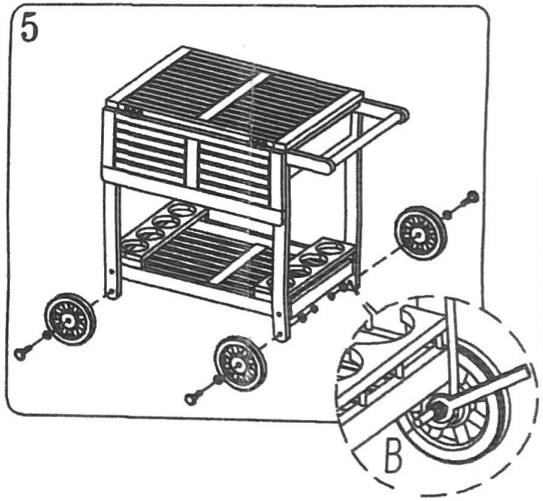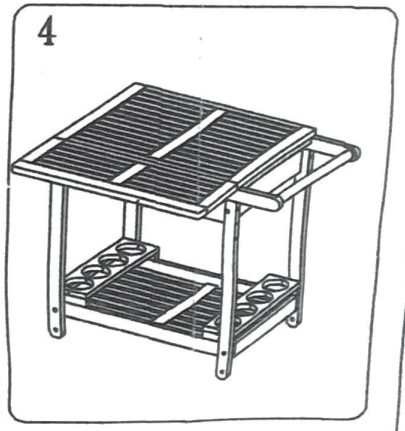
A	B	C	D	E
8 pcs	4 pcs	M6x40MM=8 pcs	M6x60=2 pcs	1 pc