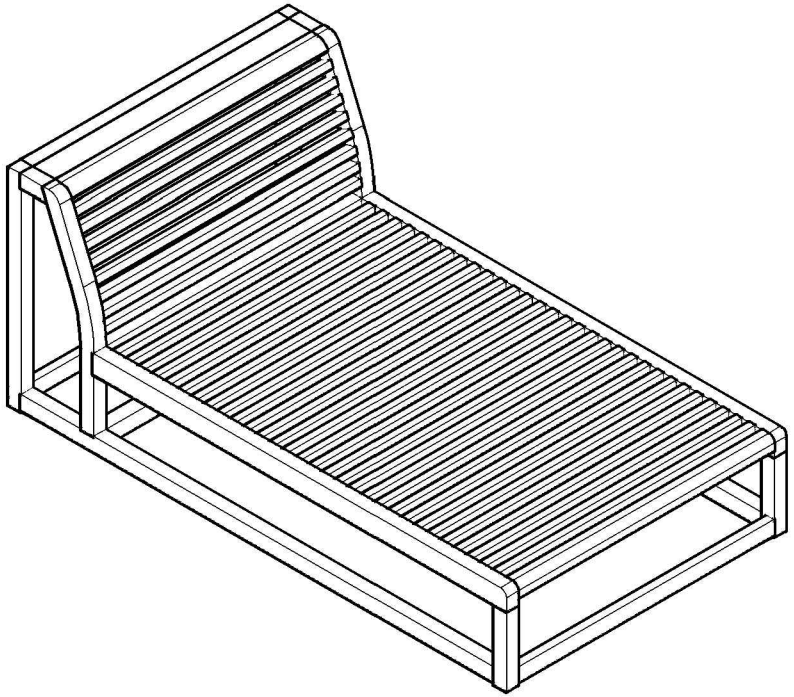16800 - MAYA TEAK LOUNGER