16512 - SOMERSET CHAISE LOUNGER

A	B	C
24 pcs	8 pcs	2 pcs
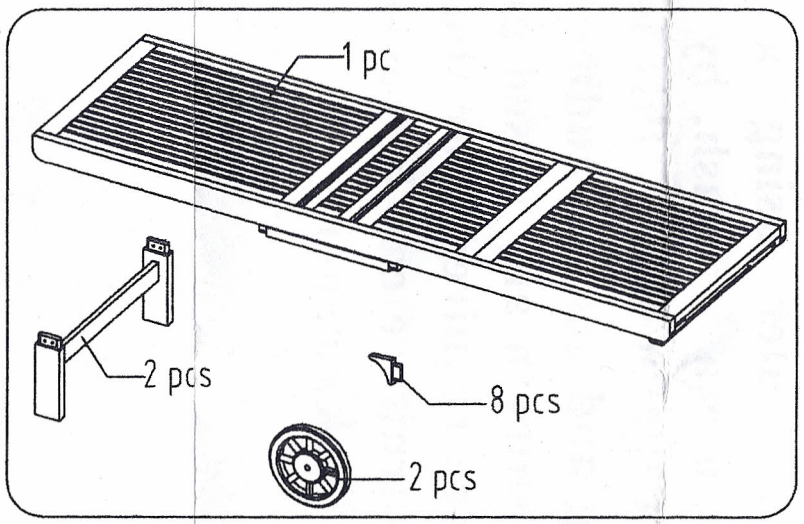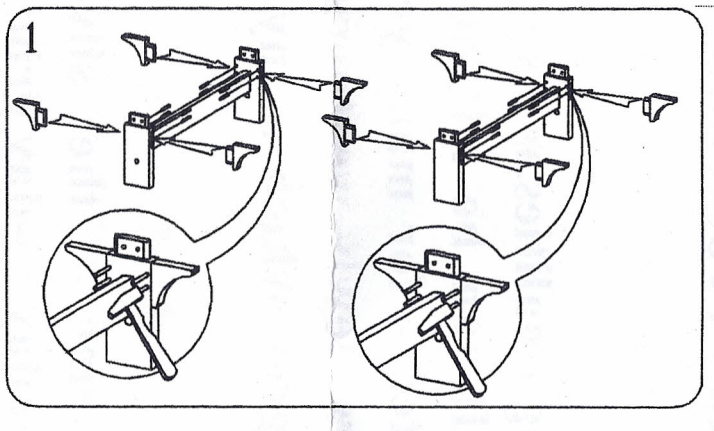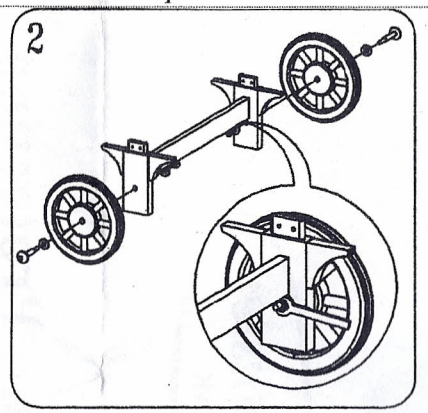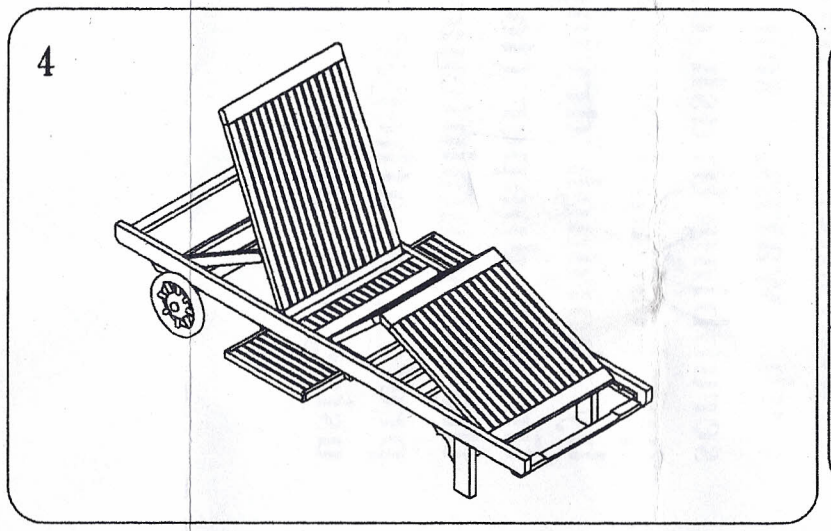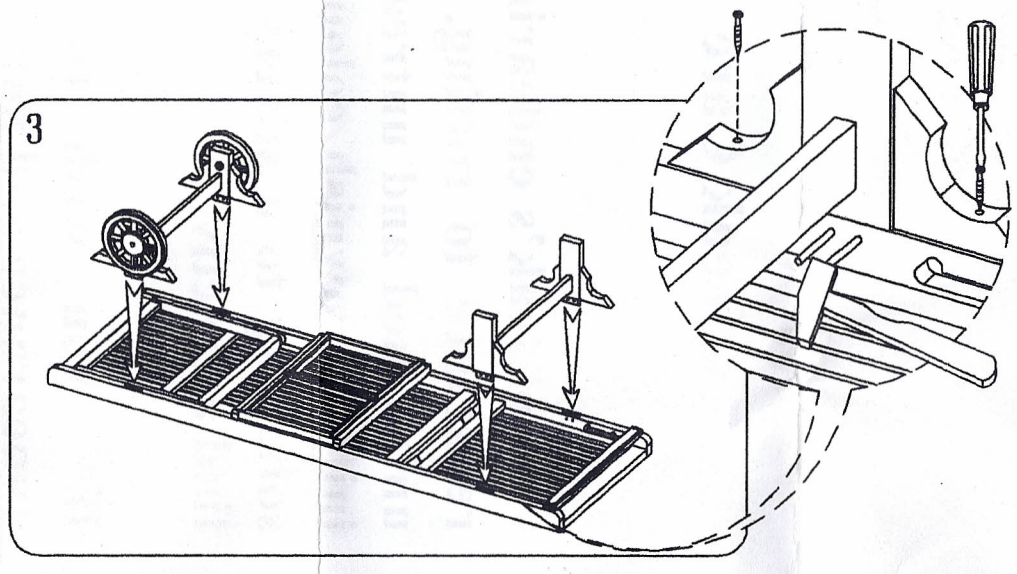
"IMPORTANT!!
Each joint is unique, precise and will fit flush. You must match the white numbered labels with the corresponding number on opposite piece. Put all pieces together **first** to assure that all the joints fit flush **then** tap in the wooden dowels"