15348 - BUCKINGHAM TABLE 6 Ft Dia

PARTS LIST :

A. LEG ASSEMBLY 2 PCS

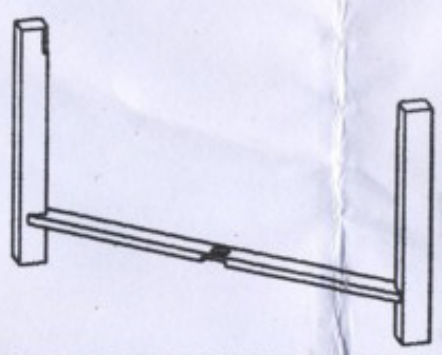

B. TOP FRAME 1 PC

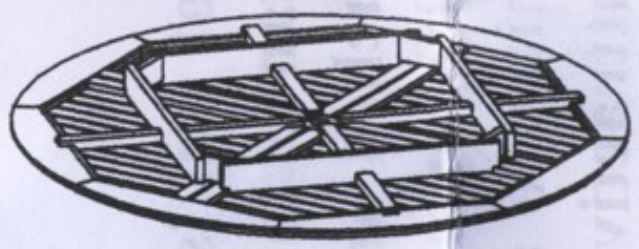

HARDWARE :

C. HEXAGONAL SCREWS	8 PCS	
D. ALLEN KEY	1 PC	
E. SCREW	2 PCS	
F. BRASS UMBRELLA	1 PC	

1

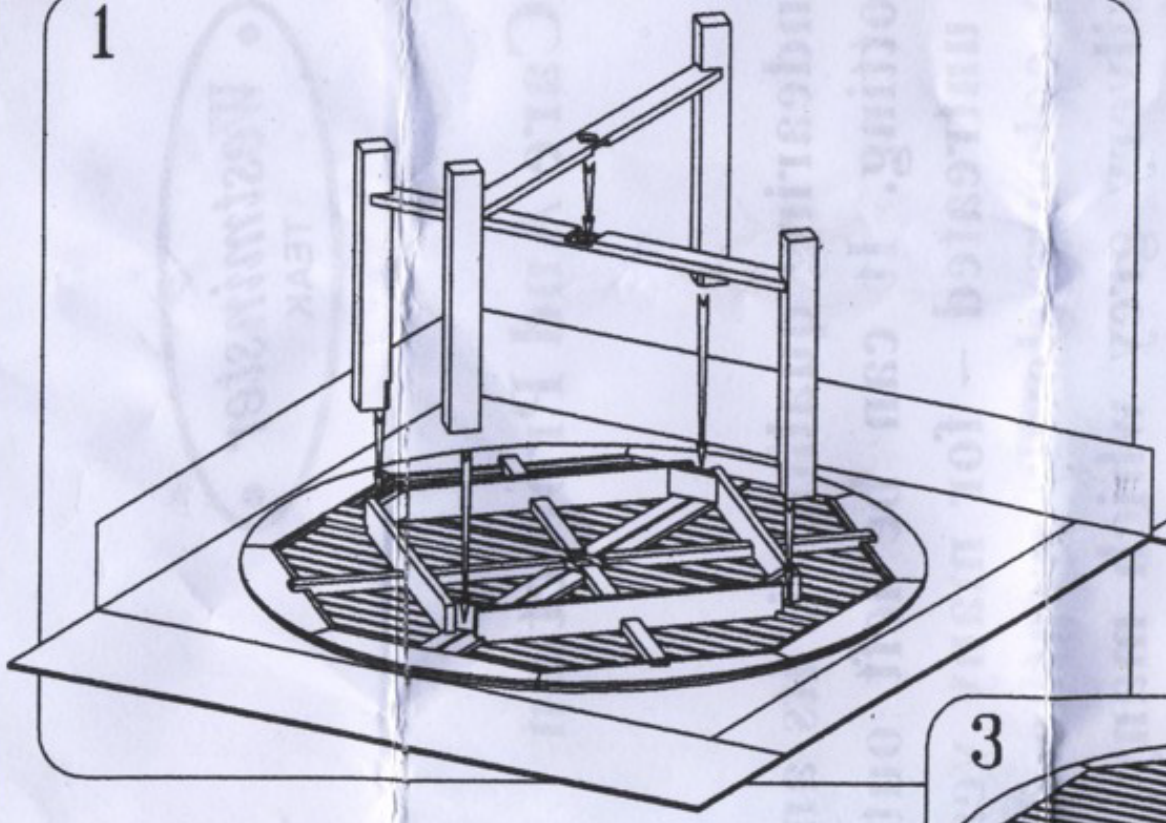

2

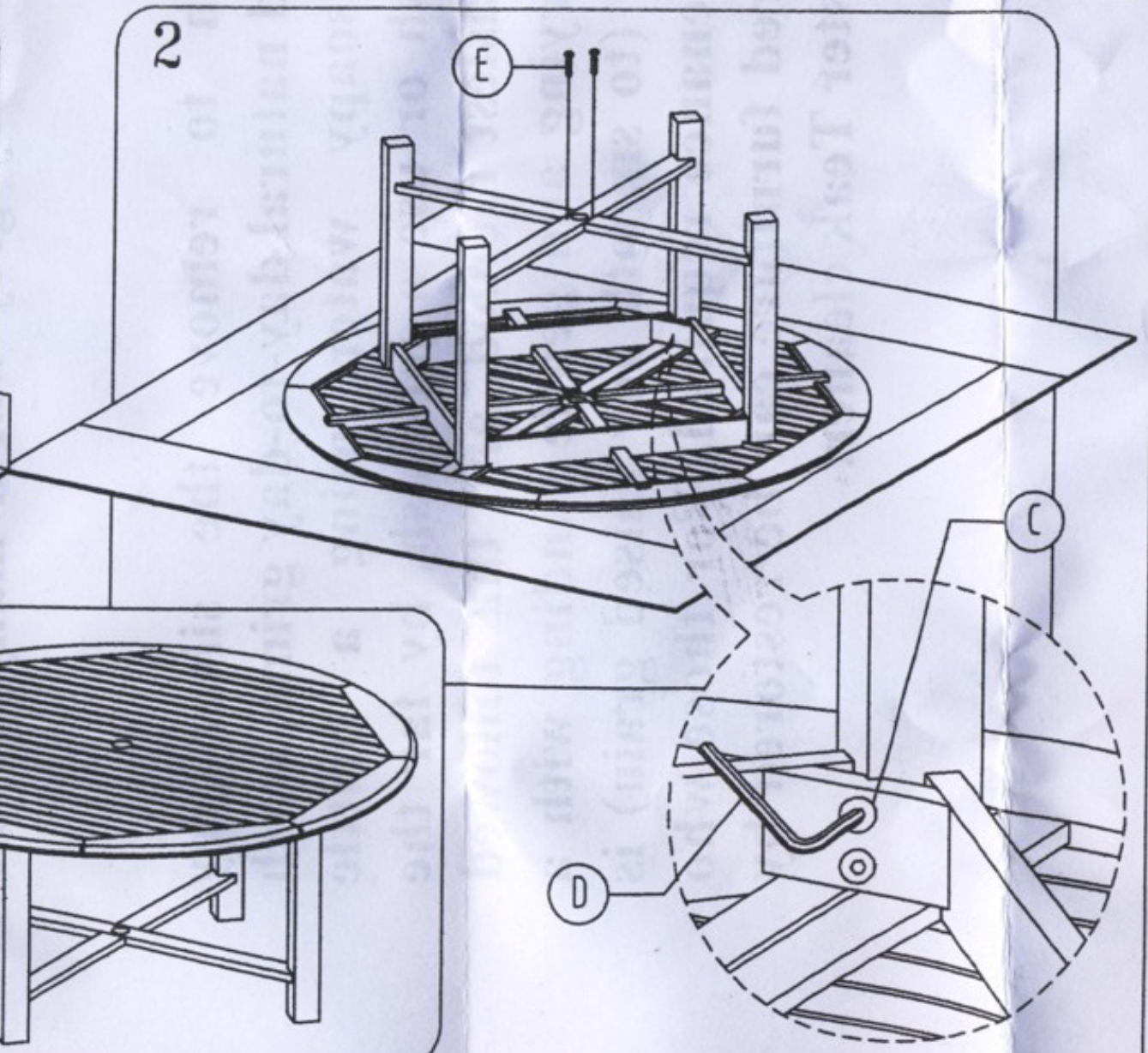

3

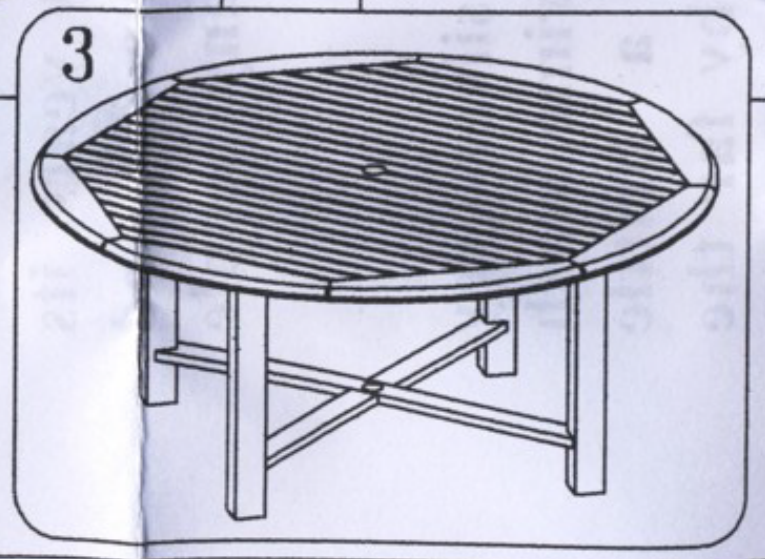

"IMPORTANT!!
Each joint is unique, precise and will fit flush. You must match the white numbered labels with the corresponding *number on opposite piece. Put all pieces* together **first** to assure that all the joints fit flush **then** tap in the wooden dowels"