14916 SURF ROUND SIDE TABLE

PART LIST :

A . TABLE TOP = 1 PCS

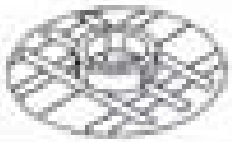

B . LEGS = 3 PCS

HARDWARE :

C. BOLT 'A' = 6 PCS

D. BOLT 'B' = 3 PCS

E. ALLEN KEY = 1 PCS

1

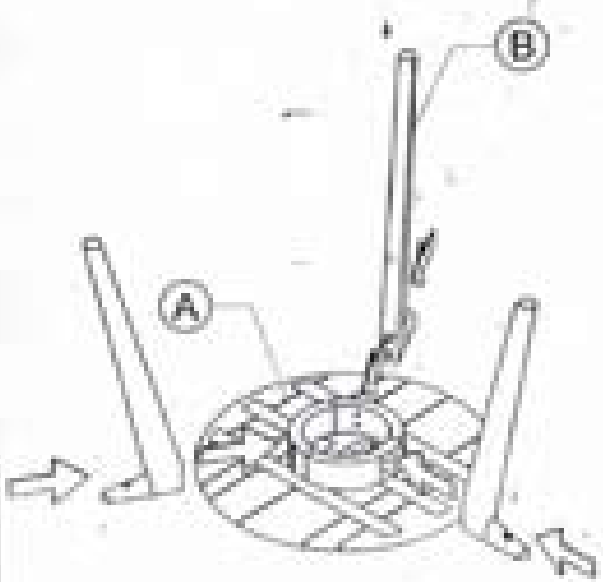

"IMPORTANT!!
Each joint is unique, precise and will fit flush. You must match the white numbered labels with the corresponding number on opposite piece. Put all pieces together first to assure that all the joints fit flush then tap in the wooden dowels"

2

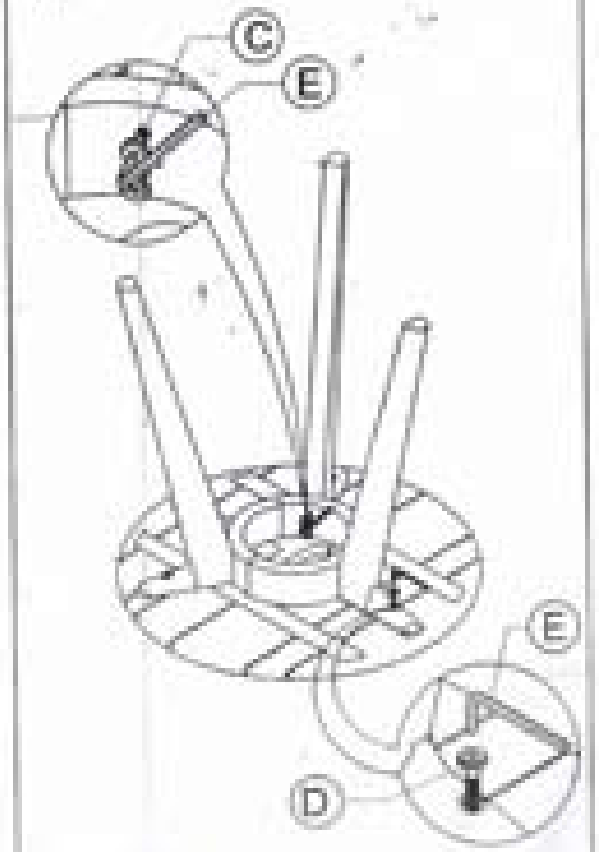

3