13121 - LAGUNA SOFA 2 SEATER

PART LIST :

A. LEG 2 PCS B. BACKREST FRAME 1 PCE C. SEATREST FRAME 1 PCE D. CENTER LEG 1 PCE

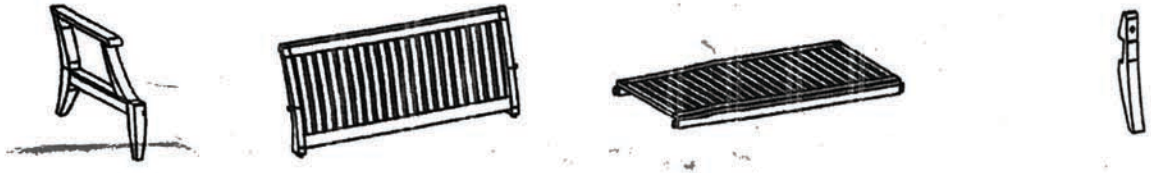

HARDWARE :

E. WOODEN DOWEL A	:	2 PCS
F. WODDEN DOWEL B	:	10 PCS
G. HEXAGONAL SCREW	:	1 PCE
H. SCREW	:	1 PCE
I. ALLEN KEY	:	1 PCE

1

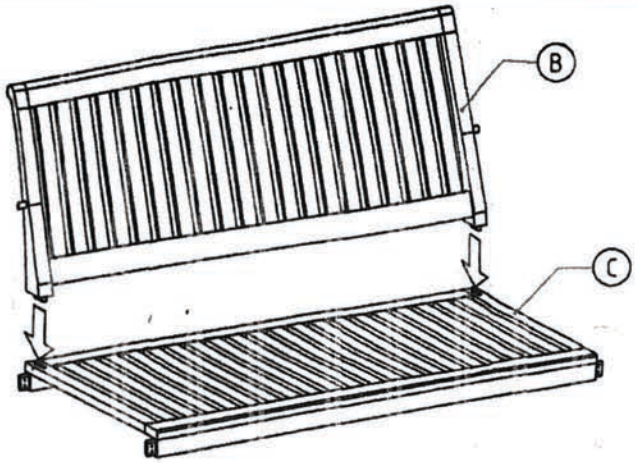

2

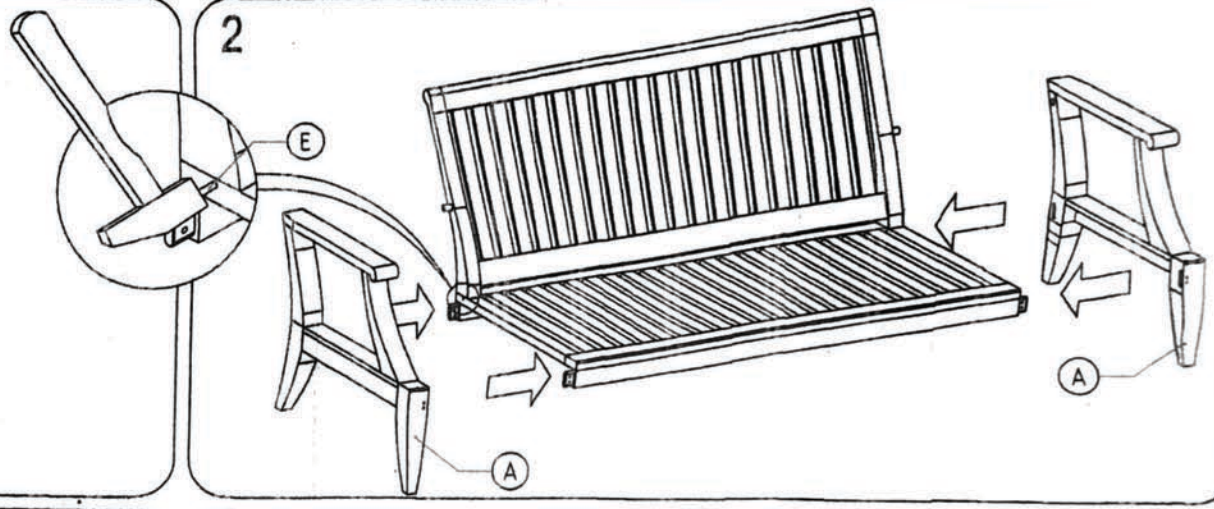

3

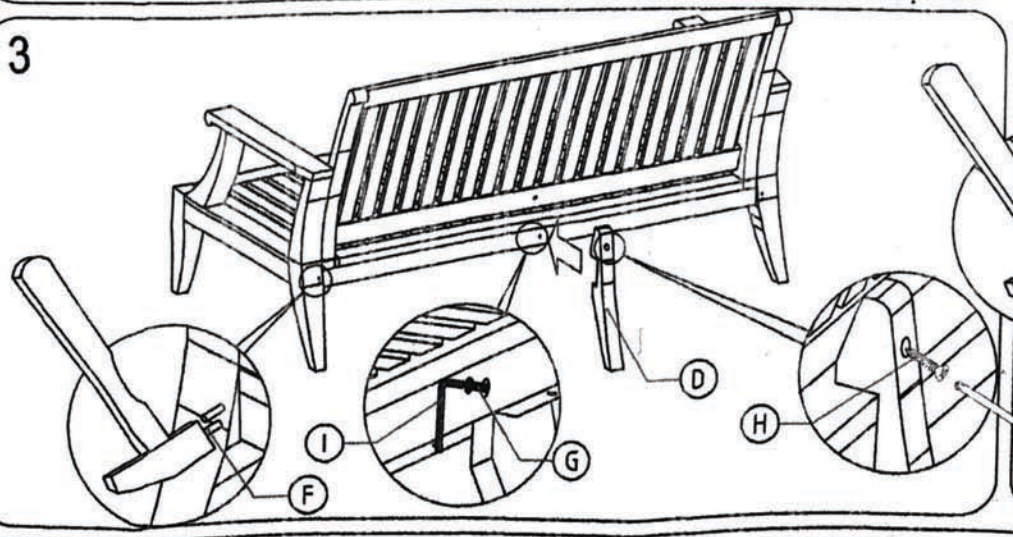

4

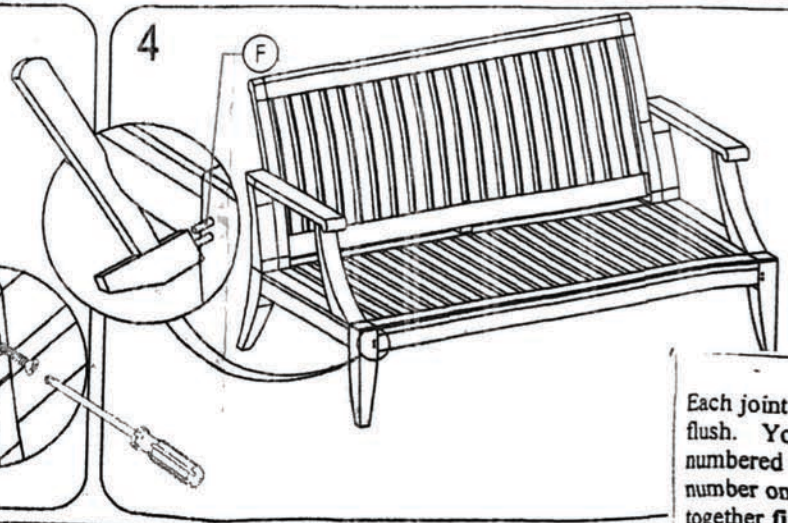

"IMPORTANT!!
Each joint is unique, precise and will fit flush. You must match the white numbered labels with the corresponding number on opposite piece. Put all pieces together **first** to assure that all the joints fit flush **then** tap in the wooden dowels"