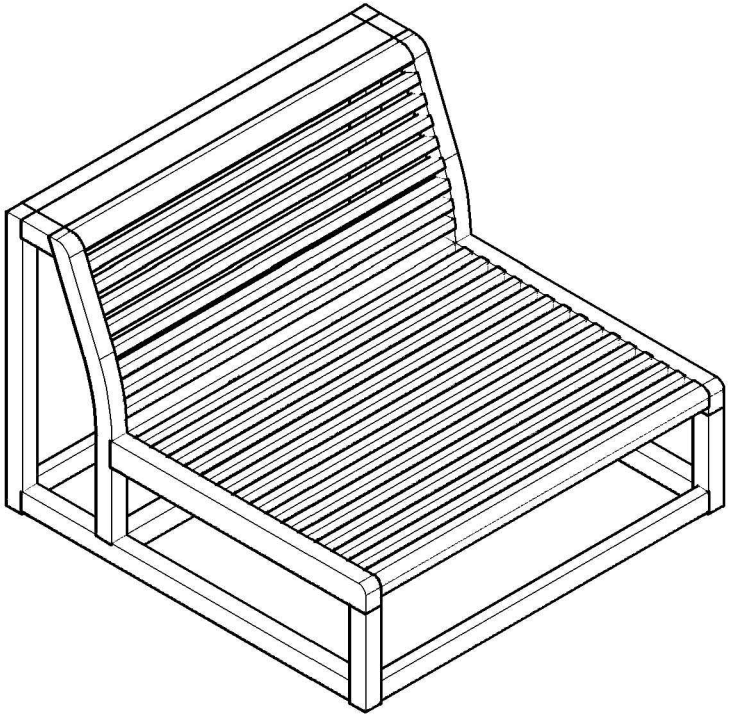11800 - MAYA SLIPER